	REVISIONS					
ZONE	LTR.	DESCRIPTION	ECN NO.	DATE	BY	APPR'D
	A	RELEASED FOR PRODUCTION	DR7833	07/15/08	DPZ	
3B	B	B1 WAS WIRE TIE	CR71215	8/21/07	DJC	DJC
2B	C	A1 REMOVED WIRE SLEEVE	DR16328 71450	19MAY08	SLK	DJC
3A 4C	D	D1 UPDATE ASSEMBLY TO PUMP CAP/DOME COVER PLATE DESIGN D2 ADD WIRE HARNESS DETAIL D3 RV0000316 WAS RV0000318 D4 TU216 WAS FW0001631 ON CHART DRAWING SA0039239	DR23287 71893 72049	30APR09	WDE	DJC

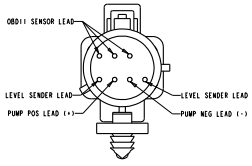

CONNECTOR MODULE MAIN PINOUT DETAIL SCALE 2:1

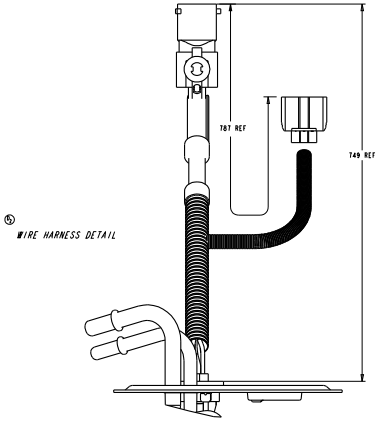

WIRE HARNESS DETAIL

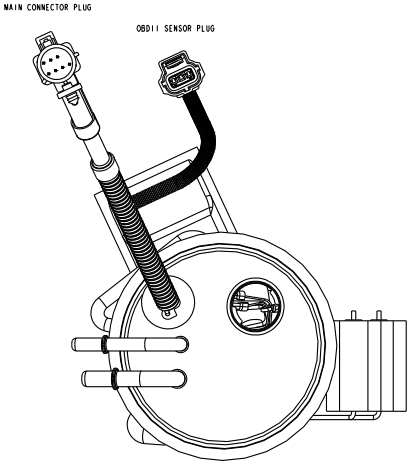

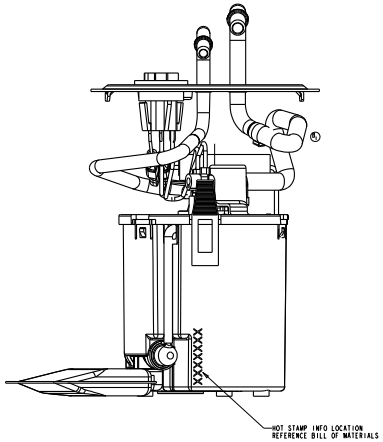

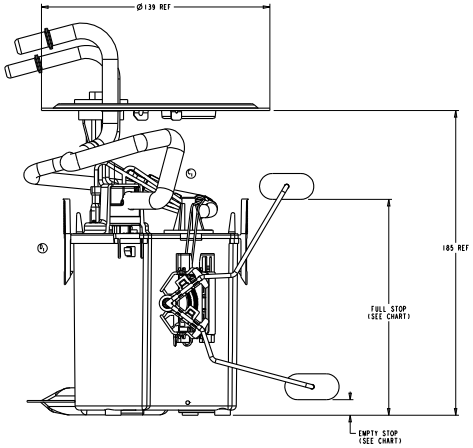

FLOAT POSITION	RESISTANCE (OHMS)
FULL STOP (131.7)	160.5±3.0
EMPTY STOP (10.0)	15±1

NOTE:

1. SPECIAL CUSTOMER PACKAGING REQUIREMENTS MAY CALL FOR THE ADDITION OF SPECIFIC LABELS NOT SHOWN ON THIS DRAWING.
2. SHOWN WIRE ROUTING MAY DIFFER FROM FINISHED PRODUCT.
3. SHOWN RESISTOR CARD AND PUMP TERMINATION MAY DIFFER FROM FINISHED PRODUCT.

THIS DRAWING IS THE PROPERTY OF TI AUTOMOTIVE. THIS DRAWING IS TO BE RETURNED TO TI AUTOMOTIVE UPON REQUEST. THIS DRAWING IS TO BE KEPT IN STRICT CONFIDENCE. NO PART OF THIS DRAWING MAY BE REPRODUCED OR TRANSMITTED IN ANY FORM OR BY ANY MEANS, ELECTRONIC OR MECHANICAL, INCLUDING PHOTOCOPYING, RECORDING, OR ANY INFORMATION STORAGE AND RETRIEVAL SYSTEM, WITHOUT THE PRIOR WRITTEN PERMISSION OF TI AUTOMOTIVE.

⊗ DENOTES ASSEMBLY/TEST/PROCESS
◇ DENOTES SAFETY CHARACTERISTIC
◊ DENOTES SIGNIFICANT CHARACTERISTIC

INTERNAL USE ONLY
DISTRIBUTION CODE
AF

DO NOT SCALE PRINT

REF: FW0001848

DIMENSIONS AND TOLERANCES PER ASC/TZ8NE 11.2.98 - 1994

PROJECTION: PRO-E

SIZE: E

TOLERANCE UNLESS OTHERWISE SPECIFIED
.X ±0.25
.XX ±0.13
.XXX ±0.07
ANGLE ±0.5°
CORNER R0.08

TI Automotive
AFTERMARKET DIVISION
600 COLUMBIA STREET
CARO, MICHIGAN 48723

MATERIAL

FINISH

SCALE: 1:1 DATE: 3/28/06
DRN BY: D. P. ZBORAY
CHK'D BY:
APPR'D BY:

TITLE: FUEL MODULE OUTLINE

DRAWING NO. TU216 REV. D